Flight Test - Required 18/04

Work Order ID 68089

PRELIMINARY ISSUE

Wednesday, April 06, 2011 11:39:52 AM

Item ID: D206-667-207BL
Revision ID: PRELIM
Item Name: 206 Aft Crosstube

Accept

Setup Start
Stop

Start Date: 4/6/2011 **Start Qty:** 1.00
Required Date: 4/18/2011 **Req'd Qty:** 1.00
Reference:

Cust Item ID:
Customer:

Run Start
Stop

Approvals: **Process Plan:** ✓ **Date:** **Tooling:** **Date:**
QC: **Date:** **SPC (Y/N):** **Date:**

Sequence ID/ Work Center ID	Operation Description	Set Up/ Run Hours	Tool ID	Tool #	Plan Code	Accept Qty	Reject Qty	Reject Number	Insp. Stamp
Draw Nbr	Revision Nbr								
100	DOCUMENT CONTROL	0.00							
DC	Memo	0.00							
Document Control	Photocopy bluefile and create labels as per PPP D206-667-207								
110	BENDING MACHINE - CROSSTUBES	0.00							
CNC Bend 2	Memo	0.00							
CNC Alpha 160 Bender	Bend tube as per Dwg D206-667-247 using CNC bender program D206-667-207								
120	QC15- Crosstube Dimensional Check	0.00							
QC	Memo	0.00							
Quality Control									

8 11/05/27

N/A

CHG001

for BG 11-5-27

DP 11-4-11

to Prod Dwg only

8 11/04/11

D206 667 207 B68089

Work Order ID 68089

Wednesday, April 06, 2011 11:39:52 AM

Item ID: D206-667-207BL
Revision ID: PRELIM
Item Name: 206 Aft Crosstube

Accept

Setup Start
Stop

Start Date: 4/6/2011 **Start Qty:** 1.00
Required Date: 4/18/2011 **Req'd Qty:** 1.00
Reference:

Cust Item ID:
Customer:

Run Start
Stop

Approvals: **Process Plan:** _____ **Date:** _____ **Tooling:** _____ **Date:** _____
QC: _____ **Date:** _____ **SPC (Y/N):** _____ **Date:** _____

Sequence ID/ Work Center ID	Operation Description	Set Up/ Run Hours	Tool ID	Tool #	Plan Code	Accept Qty	Reject Qty	Reject Number	Insp. Stamp
130		0.00							
Crosstubes	Crosstubes								
Crosstubes	**Memo**	0.00							

1-Drill pilot holes in tube using drill Jig DT & DT and drill table DT8577 and tower holes #6 as per QSI0010 and as per Dwg D206-667-247. Drill all (3) top holes.

2-Drill and Ream all holes in tube to finish size using drill Jig DT & DT as per Dwg D206-667-247 Check dimensions between holes on all four sides.

3-Flip tube and switch drilling Jigs from right to left, left to right. Locate Jigs off existing holes using "T" pins.

4-Drill pilot holes using drill Jig DT & DT as per Dwg D206-667-247. Drill only the top (2) holes.

5-Drill & ream the top (2) holes to finish size using drill Jig DT & DT as per Dwg D206-667-247

6-Drill Fwd rivet holes using drill Jig DT as per Dwg D206-667-147.Note: Fwd side has 3x top holes.

7-Drill Aft rivet holes using drill Jig DT as per Dwg D206-667-247.

8-C'sink holes as per Dwg D206-667-247.

9 -Scribe part # and batch # using vibrating stylus as per Dwg D206-667-247 Inside of Cuff(Donot engrave on outside of tube)

10 -Deburr & Inspect for surface damage. Repair damage within limits as per

SAD 11-04-12

11-4-12

Work Order ID 68089

Wednesday, April 06, 2011 11:39:52 AM

Item ID: D206-667-207BL
Revision ID: PRELIM
Item Name: 206 Aft Crosstube

Accept

Setup Start
Stop

Start Date: 4/6/2011 **Start Qty:** 1.00
Required Date: 4/18/2011 **Req'd Qty:** 1.00
Reference:

Cust Item ID:
Customer:

Run Start
Stop

Approvals: **Process Plan:** _____ **Date:** _____ **Tooling:** _____ **Date:** _____
QC: _____ **Date:** _____ **SPC (Y/N):** _____ **Date:** _____

Sequence ID/ Work Center ID	Operation Description	Set Up/ Run Hours	Tool ID	Tool #	Plan Code	Accept Qty	Reject Qty	Reject Number	Insp. Stamp
	Dwg D206-667-247								
140 HandFXtube Hand Finishing Crosstubes	Crosstubes Chemical Conversion	0.00							
	Memo	0.00	SAN 11-04-12			①			
150 QC Quality Control	QC3- Inspect Part Finish	0.00							
	Memo	0.00				11	11	04	12 ①
160 QC Quality Control	QC5- Inspect part completeness to step on W/O	0.00							
	Memo	0.00	12.04.12			①			

Work Order ID 68089

Wednesday, April 06, 2011 11:39:52 AM

Item ID: D206-667-207BL
Revision ID: PRELIM
Item Name: 206 Aft Crosstube

Accept

Setup Start
Stop

Start Date: 4/6/2011 **Start Qty:** 1.00
Required Date: 4/18/2011 **Req'd Qty:** 1.00
Reference:

Cust Item ID:
Customer:

Run Start
Stop

Approvals: **Process Plan:** _____ **Date:** _____ **Tooling:** _____ **Date:** _____
QC: _____ **Date:** _____ **SPC (Y/N):** _____ **Date:** _____

Sequence ID/ Work Center ID	Operation Description	Set Up/ Run Hours	Tool ID	Tool #	Plan Code	Accept Qty	Reject Qty	Reject Number	Insp. Stamp
170	Outsource process - NDT per QSI038 4.1	0.00							
Outsource2						CL	11/04/13		①
Outsource process - NDT	**Memo**	0.00							
	Liquid Penetrant Inspection as per QSI 038Or Issue P/O: 13857 LPI as per ASTM 1417 Level 2 Attach copy of NDT results to work order								
180		0.00							
Packaging	Packaging						11/4/13		①
Packaging	**Memo**	0.00							
	Ensure copy of NDT results attached to work order.								
190	QC5- Inspect part completeness to step on W/O	0.00							
QC						FT	11-04-13		
Quality Control	**Memo**	0.00							
	Ensure results are as per Dwg D206-667-247								

Work Order ID 68089

Wednesday, April 06, 2011 11:39:52 AM

Item ID: D206-667-207BL
Revision ID: PRELIM
Item Name: 206 Aft Crosstube

Accept

Setup Start
Stop

Start Date: 4/6/2011 **Start Qty:** 1.00
Required Date: 4/18/2011 **Req'd Qty:** 1.00
Reference:

Cust Item ID:
Customer:

Approvals: **Process Plan:** _____ **Date:** _____ **Tooling:** _____ **Date:** _____
QC: _____ **Date:** _____ **SPC (Y/N):** _____ **Date:** _____

Run Start
Stop

Sequence ID/ Work Center ID	Operation Description	Set Up/ Run Hours	Tool ID	Tool #	Plan Code	Accept Qty	Reject Qty	Reject Number	Insp. Stamp
200		0.00							
SprayPaint	SprayPaint								
	Memo	0.00							
Spray Painting	1-Prime inside and outside crosstube as per QSI 005 4.2 2-Paint outside crosstube with White Imron as per QSI 005 4.2								
	PRIME: Start Time:_____ Fininsh Time:_____								
	PAINT: Start Time:_____ Finish Time:_____								
210	QC14- Inspect Spray Paint	0.00							
QC									
	Memo	0.00							
Quality Control	Wrap in plastic bag to protect from scratches								

Primer 117 319
paint 115 985
clear 117 101

BT 11-04-14
BT 11-05-25 (PTO)

Blue Deffect

~~primed only~~ all to part
~~per DS/CR 11.14.04~~

11 04 15 (1)
11 05 26 (0)

Dart Aerospace Ltd

W/O: 68089		WORK ORDER CHANGES					
DATE	STEP	PROCEDURE CHANGE	By	Date	Qty	Approval Chief Eng / Prod Mgr	Approval QC Inspector
11-05-09	200.	remove supports grind off remaining magnetbond Feather edge paint using Scotch brite or 320 grit paper re-alodine	11/05/09				
11-05-09	200	re-paint blue as per QSR 005	BT	11-05-25	1	11.05.09 051042	

Part No: D206-667-207BL PAR #: _____ Fault Category: _____ NCR: Yes No DQA: _____ Date: _____

Resolution: _____ Disposition: _____ QA: N/C Closed: _____ Date: _____

NCR:		WORK ORDER NON-CONFORMANCE (NCR)						
DATE	STEP	Description of NC Section A	Corrective Action Section B			Verification Section C	Approval Chief Eng	Approval QC Inspector
			Initial Chief Eng	Action Description Chief Eng	Sign & Date			

NOTE: Date & initial all entries

Work Order ID 68089

Wednesday, April 06, 2011 11:39:52 AM

Item ID: D206-667-207BL
Revision ID: PRELIM
Item Name: 206 Aft Crosstube

Accept

Setup Start
Stop

Start Date: 4/6/2011 **Start Qty:** 1.00
Required Date: 4/18/2011 **Req'd Qty:** 1.00
Reference:

Cust Item ID:
Customer:

Run Start
Stop

Approvals: **Process Plan:** _____ **Date:** _____ **Tooling:** _____ **Date:** _____
QC: _____ **Date:** _____ **SPC (Y/N):** _____ **Date:** _____

Sequence ID/ Work Center ID	Operation Description	Set Up/ Run Hours	Tool ID	Tool #	Plan Code	Accept Qty	Reject Qty	Reject Number	Insp. Stamp
220		0.00							
Crosstubes	Crosstubes					RT	11 - 04 - 18		
Crosstubes	**Memo**	0.00							
Crosstubes	1-Install nut plates as per Dwg D206-667-247.								
230		0.00							
Crosstubes	Skidtubes					RT	11 - 04 - 15		
Crosstubes	**Memo**	0.00							
Crosstubes	1-Install support using 0.03" to 0.06" thick layer of magnobond 6398 per QSI 015. Let cure for 12h after installation and prior to packaging. Note: (3) top holes should be facing up. A/R Magnobond 6398 : 116677								
	2-Install supports and clamps as per Dwg D206-667-247. Torque clamps to 80-100 in lb								

AHO

Dart Aerospace Ltd

W/O: 68089	WORK ORDER CHANGES						
DATE	STEP	PROCEDURE CHANGE	By	Date	Qty	Approval Chief Eng / Prod Mgr	Approval QC Inspector
11-05-26	230	re assemble wiring ~~as~~ blue supports 2892-1B62592 + new clamps MS21920-22 m 117279 scrap old clamps have old supports re worked + returned to stock — see w/o 70115 (as per B# 70115)	BJ	11-05-26		11-05-27	

Part No: D206-667-207BL PAR #: _____ Fault Category: _____ NCR: Yes No DQA: _____ Date: _____

Resolution: _____ Disposition: _____ QA: N/C Closed: _____ Date: _____

NCR:	WORK ORDER NON-CONFORMANCE (NCR)							
DATE	STEP	Description of NC Section A	Corrective Action Section B			Verification Section C	Approval Chief Eng	Approval QC Inspector
			Initial Chief Eng	Action Description Chief Eng	Sign & Date			

NOTE: Date & initial all entries

H:\fFORMS\Quality Assurance\approved QA\NCRWO RevE

Work Order ID 68089

Wednesday, April 06, 2011 11:39:52 AM

Item ID: D206-667-207BL
Revision ID: PRELIM
Item Name: 206 Aft Crosstube

Accept

Setup Start
Stop

Start Date: 4/6/2011 **Start Qty:** 1.00
Required Date: 4/18/2011 **Req'd Qty:** 1.00
Reference:

Cust Item ID:
Customer:

Run Start
Stop

Approvals: **Process Plan:** _____ **Date:** _____ **Tooling:** _____ **Date:** _____
QC: _____ **Date:** _____ **SPC (Y/N):** _____ **Date:** _____

Sequence ID/ Work Center ID	Operation Description	Set Up/ Run Hours	Tool ID	Tool #	Plan Code	Accept Qty	Reject Qty	Reject Number	Insp. Stamp
240	QC5- Inspect part completeness to step on W/O	0.00							
QC	Memo	0.00							
Quality Control									
250	Pick Kit	0.00							
Packaging	Memo	0.00							
Packaging									
260	QC4- 100% Inspect kits for completeness	0.00							
QC	Memo	0.00							
Quality Control									

inspection Assembly to Rev A Dwg. 8 11/05/27

N/A CP 11.04.14

11/5/27 8

N/A CP 11.04.14

8 11/05/27 to Rev A Dwg.

Work Order ID 68089

Wednesday, April 06, 2011 11:39:52 AM

Item ID: D206-667-207BL
Revision ID: PRELIM
Item Name: 206 Aft Crosstube

Accept

Setup Start
Stop

Start Date: 4/6/2011 **Start Qty:** 1.00
Required Date: 4/18/2011 **Req'd Qty:** 1.00
Reference:

Cust Item ID:
Customer:

Run Start
Stop

Approvals: **Process Plan:** _____ **Date:** _____ **Tooling:** _____ **Date:** _____
QC: _____ **Date:** _____ **SPC (Y/N):** _____ **Date:** _____

Sequence ID/ Work Center ID	Operation Description	Set Up/ Run Hours	Tool ID	Tool #	Plan Code	Accept Qty	Reject Qty	Reject Number	Insp. Stamp
270		0.00							
Packaging	Packaging								
Packaging	**Memo**	0.00							
Packaging	Identify and pack for shipping as per PPP D206-667-207 Location:_____ PPP Rev:_____		11.04.19				11/05/21		
280	QC21- Final Inspection - Work Order Release	0.00							
QC	**Memo**	0.00	test. PA1 11.04.21				11/5/30		
Quality Control									

11-05-30

POSITIVE RECALL
EFFECTIVE 11/04/06 AUTH
RELEASED DATE 11.05.25

Picklist Print

Wednesday, April 06, 2011 11:39:49 AM

Work Order ID: 68089

Parent Item: D206-667-207BL

Parent Item Name: 206 Aft Crosstube

Start Date: 4/6/2011 **Required Date:** 4/18/2011

Start Qty: 1.00 **Required Qty:** 1.00

Comments: RevA 11.01.13 New Issue EC verified by:DD

Component Item ID/ Item Name	Replacement Item ID	Mfg/ Purch	Bin Item	Primary Location	Last Location	Route Seq ID	Unit of Measure	Qty on Hand	Qty per Kit	Total Qty	Qty Issued	Date Issued	Status
AN5-10A Bolt		Purchased	No				Each	320.0000	10	10			
				Location		**Loc Qty**		**Loc Code**					
				ST337		320							
					116704	20							
					116924	50							
					117010	50							
					117313	200							
AN5-32A Bolt		Purchased	No				Each	153.0000	4	4			
				Location		**Loc Qty**		**Loc Code**					
				ST340		153							
					115108	43							
					115589	60							
					117161	50							
AN5-34A Bolt		Purchased	No				Each	72.0000	4	4			
				Location		**Loc Qty**		**Loc Code**					
				ST340		72							
					115835	12							
					116003	20							
					116704	20							
					117010	20							

11/5/2

Picklist Print

Wednesday, April 06, 2011 11:39:49 AM

Work Order ID: 68089

Parent Item: D206-667-207BL

Parent Item Name: 206 Aft Crosstube

Start Date: 4/6/2011 **Required Date:** 4/18/2011

Start Qty: 1.00 **Required Qty:** 1.00

AN960JD516 NAS1149D0563J Washer	Purchased	No		Each	0.0000	XS	18 M117291 11/5/27
D206-667-247TRN Crosstube Ass'y	Manufactured	No	B68087	Each	0.0000		1 SD 11-04-11
D2873-043 Nut Plate Assembly	Manufactured	No		Each	24.0000		2 RT 11-04-18

Location	Loc Qty	Loc Code	
LG052	24		
65375	4		
~~66898~~	20		x2

D2873-045 Nut Plate Assembly	Manufactured	No		Each	19.0000		2 RT 11-04-18

Location	Loc Qty	Loc Code	
LG052	19		
65992	19		x2

D2892-1 Support	Manufactured	No		Each	28.0000		2 RT 11-04-15

Location	Loc Qty	Loc Code	
LG052	28		
42785	16		
62592	6		x2 RT 11-05-26
~~65717~~	6		~~x2~~

rework + return to stock
as per B 70115

Picklist Print

Wednesday, April 06, 2011 11:39:49 AM

Work Order ID: 68089

Parent Item: D206-667-207BL

Parent Item Name: 206 Aft Crosstube

Start Date: 4/6/2011 **Required Date:** 4/18/2011

Start Qty: 1.00 **Required Qty:** 1.00

D3595-063-450 Manufactured No Each 71.0000 4

RUBBER CUSHION

ET 11-04-15

Location	Loc Qty	Loc Code
LG	66	
67353	66	
LG055	5	
67067	5	

x4

MS20601-AD4W10 Purchased No Each 184.0000 14

RIVET

ET 11-04-18

Location	Loc Qty	Loc Code
LG051	184	
116186	3	
116767	82	
117193	99	

x 14

MS21042L5 Purchased No Each 849.0000 4

Nut

11/5/2 7 8

Location	Loc Qty	Loc Code
ST300	849	
115594	89	
116105	500	
116548	260	

4

MS21920-22 Purchased No Each 85.0000 4

Clamp(per MIL-DTL-8783C)

M117279 ET 11 05 26

ET 11-04-15

Location	Loc Qty	Loc Code
LG050	85	
116207	35	
117279	50	

x4

DART AEROSPACE LTD	Work Order:	68089
Description: Crosstube	Part Number:	D206-667-207
Inspection Dwg: D206-667-207 **Rev:** PA1		Page 1 of 1

Required Dimension	Min	Max
Height	18.34	18.60
1/2 Span	41.79	42.05
Angle	54	56
Total Span		

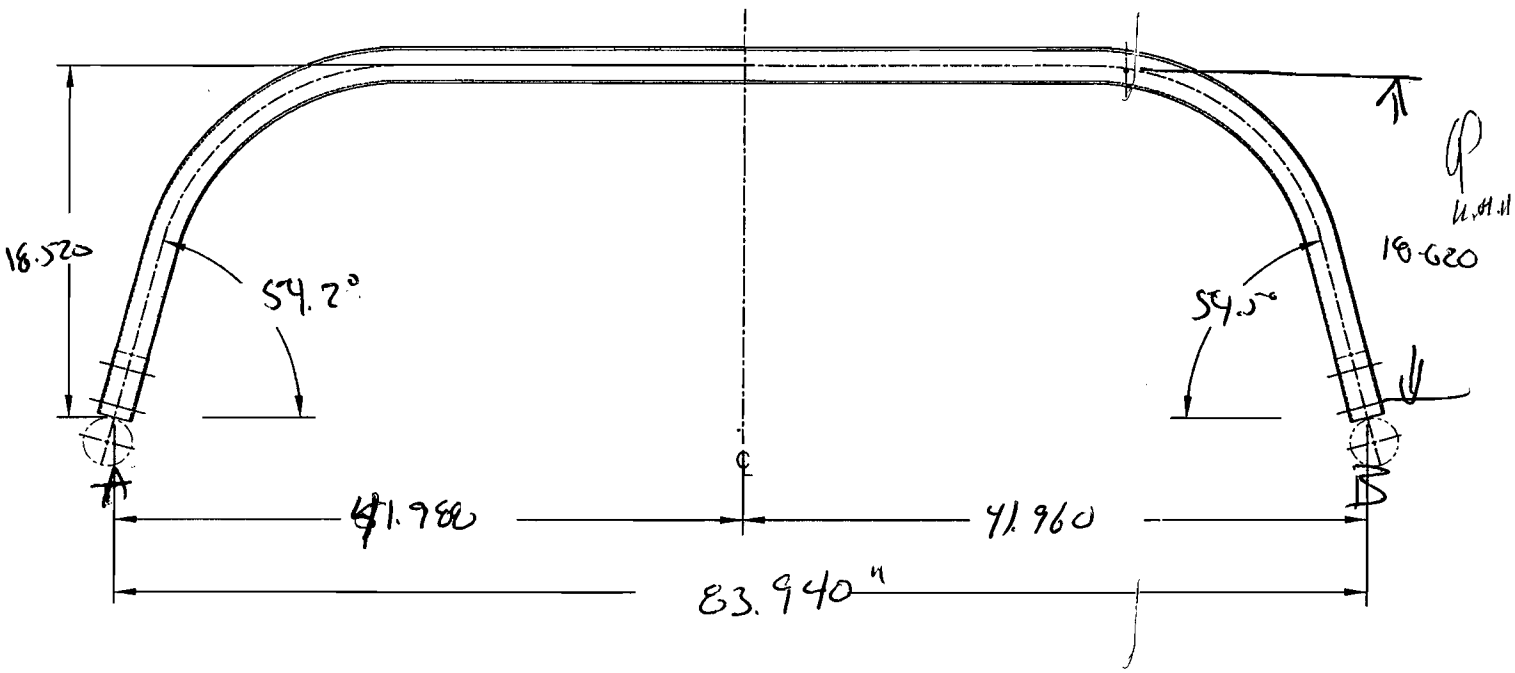

Comments
Height is 0.020 over tolerance on one side. Acceptable. CP 11.04.11

QC15 Inspection	[illegible]
Date	11/04/11

Rev	Date	Change	Revised by	Approved
		New Issue		

Item	Qty -247	Part Number	Description
1	X	D206-667-247	CROSSTUBE ASSEMBLY (206L MID AFT)
2	1	D6004-115	CROSSTUBE
3	2	D2873-043	NUT PLATE
4	2	D2873-045	NUT PLATE
5	2	D2892-1	SUPPORT
6	4	D3595-063-450	RUBBER CUSHION
7	4	MS21920-22	CLAMP
8	14	MS20601AD4W10	RIVET (OR NAS9302B-4-10)
9	A/R	MAGNOBOND 6398	ROCKWELL SPECIFICATION RBO-120-023 ADHESIVE (TEXTRON/BELL SPEC. 299-947-100, TYPE II, CLASS 2 ADHESIVE)

GENERAL NOTES:

1) MATERIAL: MANUFACTURED FROM D6004-115
   FINISHED LENGTH = 99.76±0.020
2) FINISH: CHEMICAL CONVERSION COAT PER DART QSI 005 4.1
   PRIME INSIDE AND OUTSIDE PER DART QSI 005 4.2
   PAINT OUTSIDE PER DART QSI 005 4.2
3) TOLERANCES ARE PER DART QSI 018 UNLESS OTHERWISE NOTED.
4) UNITS: INCHES UNLESS OTHERWISE NOTED.
5) BREAK SHARP EDGES: 0.005 TO 0.010 MAX.
6) IDENTIFICATION: SCRIBE DART PART NUMBER "D206-667-247" AND BATCH NUMBER ON INSIDE OF CUFF PER DART QSI 044 6.4 (VIBRATING STYLUS).
7) WEIGHT: 21.1 lbs (-607 = 17.7 lbs)
8) PART IS SYMMETRIC ABOUT CENTERLINE.
9) RUN CUTTER OFF PART WHERE INDICATED. BLEND OUT EDGE LONGITUDINALLY, TRANSITION SHOULD BE SMOOTH.
10) BEND PROGRESSIVELY WITH A MINIMUM OF 8 PASSES. MAXIMUM TUBE FLATTENING DUE TO BENDING IS 6% BASED ON O.D.
11) LIQUID PENETRANT INSPECT OUTSIDE SURFACE OF CROSSTUBE PER QSI 038.
12) INSTALL D2892-1 SUPPORT USING 0.03" TO 0.06" THICK LAYER OF MAGNOBOND 6398 PER QSI 015. LET CURE FOR 12 HOURS AFTER INSTALLATION AND PRIOR TO PACKAGING.
13) INSTALL MS21920-22 CLAMPS WITH D3595-063-450 RUBBER CUSHIONS TO SECURE THE D2892-1 SUPPORT ON TOP SIDE OF THE CROSSTUBE. ENSURE CLAMP MECHANISMS ARE LOCATED ON CROSSTUBE SUPPORTS.
14) EXTREME CARE MUST BE TAKEN TO PROTECT THE OUTSIDE SURFACE OF THE TUBE. THE OUTSIDE SURFACE MUST BE SMOOTH AND FREE FROM SURFACE DEFECTS SUCH AS SCRATCHES, NICKS, OR DENTS. DEFECTS UP TO 0.005" MAY BE BLENDED OUT LONGITUDINALLY. CIRCUMFERENTIAL GRIND MARKS ARE UNACCEPTABLE.
15) TORQUE CLAMPS 80 TO 100 IN-LB. ENSURE AT LEAST 1.5 THREADS ARE SHOWING IN SAFETY AND THAT NUT HAS NOT BOTTOMED-OUT AFTER TORQUING.

68089

PRELIMINARY ISSUE

Rev PA1 CP 11.01.06

REV.	DESCRIPTION	BY	DATE
PA1	NEW ISSUE	CP	10.12.23

DESIGN	CP	DART AEROSPACE LTD HAWKESBURY, ONTARIO, CANADA	
DRAWN	CP		
CHECKED		DRAWING NO. D206-667-247	REV. PA1 SHEET 1 OF 4
MFG. APPR.			
APPROVED		TITLE CROSSTUBE ASS'Y (206L MID AFT)	SCALE NTS
DE APPR.			
DATE	10.12.23		

COPYRIGHT © 2010 BY DART AEROSPACE LTD
THIS DOCUMENT IS PRIVATE AND CONFIDENTIAL AND IS SUPPLIED ON THE EXPRESS CONDITION THAT IT IS NOT TO BE USED FOR ANY PURPOSE OR COPIED OR COMMUNICATED TO ANY OTHER PERSON WITHOUT WRITTEN PERMISSION FROM DART AEROSPACE LTD.

PRELIMINARY ISSUE
Rev PA1 11.01.06

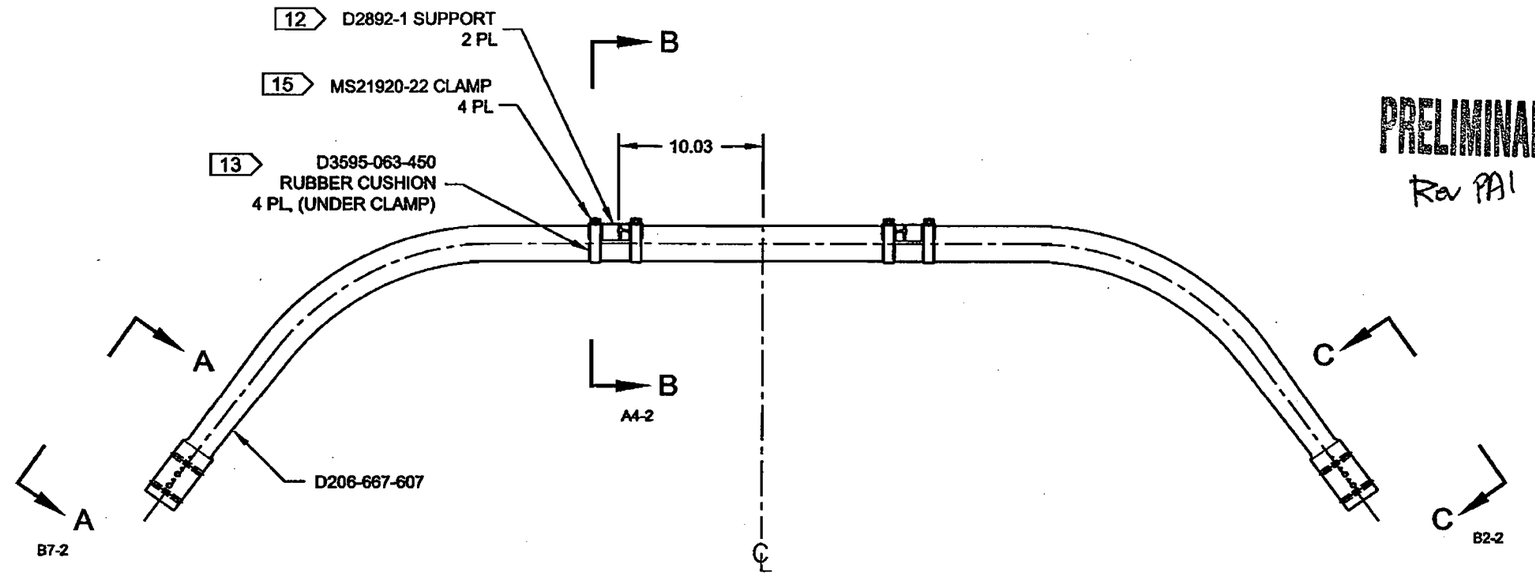

D206-667-247
ASSEMBLY DETAIL
(VIEW LOOKING FWD)

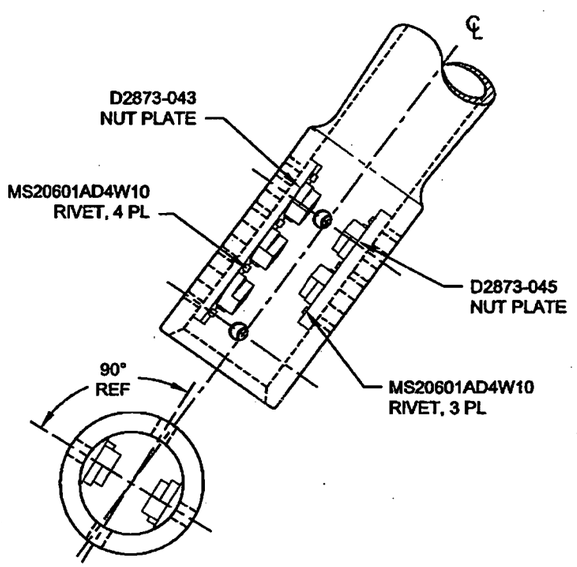

C7-2 **VIEW A-A: CUFF DETAIL**
SCALE 4X

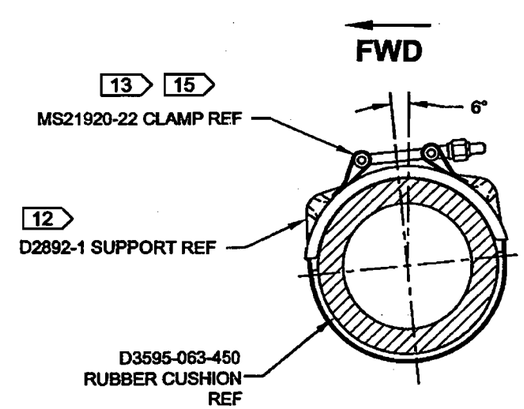

D5-2 **SECTION B-B**
SCALE 5X

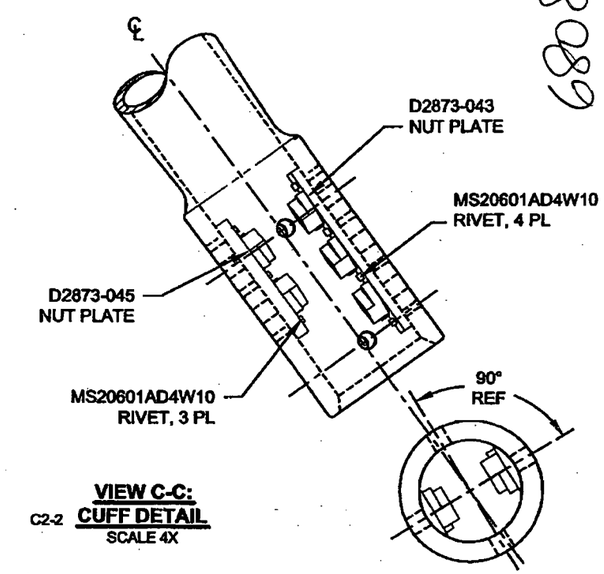

C2-2 **VIEW C-C: CUFF DETAIL**
SCALE 4X

DESIGN		**DART AEROSPACE LTD** HAWKESBURY, ONTARIO, CANADA
DRAWN		
CHECKED		DRAWING NO. D206-667-247 — REV. A — SHEET 2 OF 4
MFG. APPR.		
APPROVED		TITLE: CROSSTUBE ASS'Y (206L MID AFT) — SCALE: NTS
DE APPR.		
DATE	10.12.23	

COPYRIGHT © 2010 BY DART AEROSPACE LTD
THIS DOCUMENT IS PRIVATE AND CONFIDENTIAL AND IS SUPPLIED ON THE EXPRESS CONDITION THAT IT IS NOT TO BE USED FOR ANY PURPOSE OR COPIED OR COMMUNICATED TO ANY OTHER PERSON WITHOUT WRITTEN PERMISSION FROM DART AEROSPACE LTD.

PA1

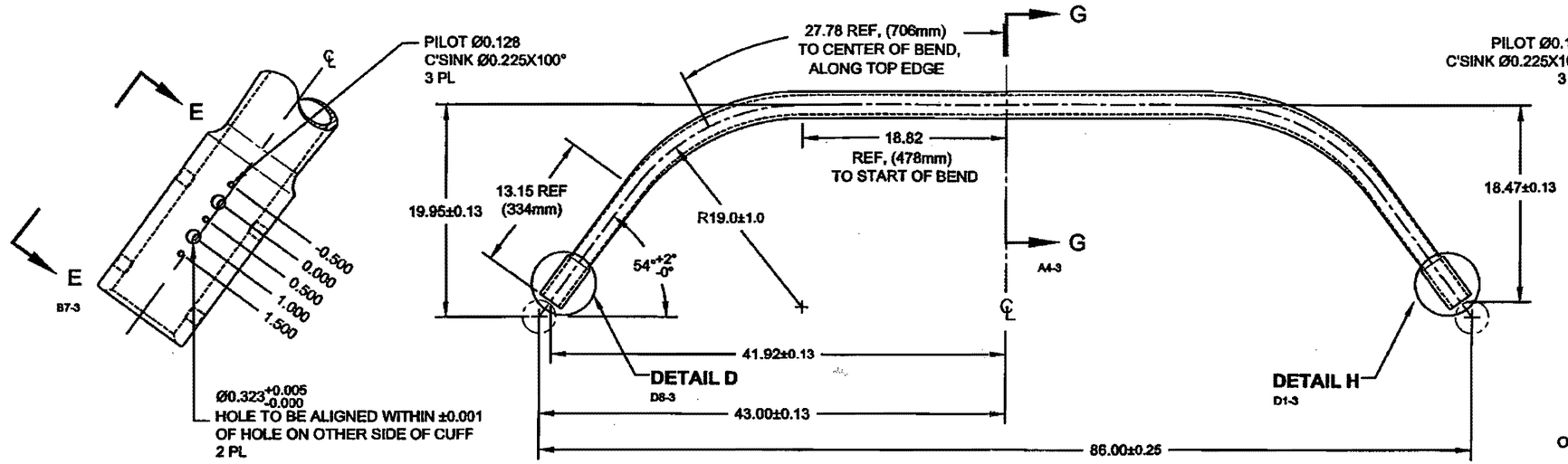

C6-3 **DETAIL D**
SCALE 4X
(VIEW LOOKING FWD)

10 **D206-667-607**
BENDING AND DRILLING DETAIL
(VIEW LOOKING FWD)

C3-3 **DETAIL H**
SCALE 4X
(VIEW LOOKING FWD)

PRELIMINARY ISSUE
Rev A1 11.01.66

68089

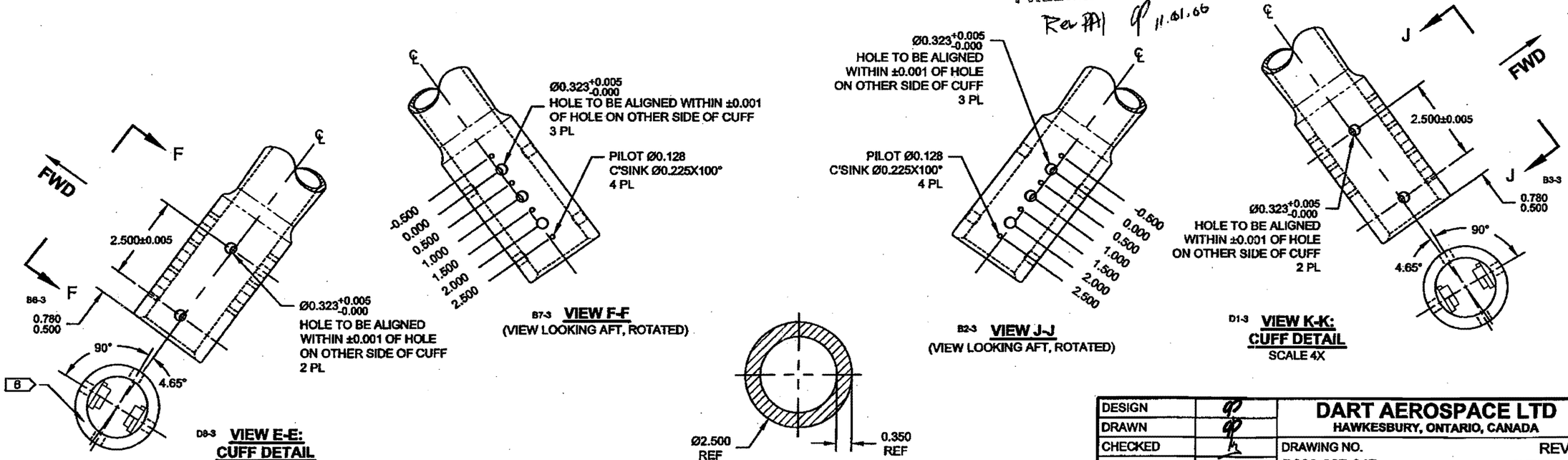

D8-3 **VIEW E-E: CUFF DETAIL**
SCALE 4X

B7-3 **VIEW F-F**
(VIEW LOOKING AFT, ROTATED)

D4-3 **SECTION G-G**
SCALE 5X

B2-3 **VIEW J-J**
(VIEW LOOKING AFT, ROTATED)

D1-3 **VIEW K-K: CUFF DETAIL**
SCALE 4X

DESIGN		**DART AEROSPACE LTD** HAWKESBURY, ONTARIO, CANADA
DRAWN		
CHECKED		DRAWING NO. D206-667-247 — REV. A — SHEET 3 OF 4
MFG. APPR.		
APPROVED		TITLE: CROSSTUBE ASS'Y (206L MID AFT) — SCALE: NTS
DE APPR.		
DATE 10.12.23		

COPYRIGHT © 2010 BY DART AEROSPACE LTD
THIS DOCUMENT IS PRIVATE AND CONFIDENTIAL AND IS SUPPLIED ON THE EXPRESS CONDITION THAT IT IS NOT TO BE USED FOR ANY PURPOSE OR COPIED OR COMMUNICATED TO ANY OTHER PERSON WITHOUT WRITTEN PERMISSION FROM DART AEROSPACE LTD.

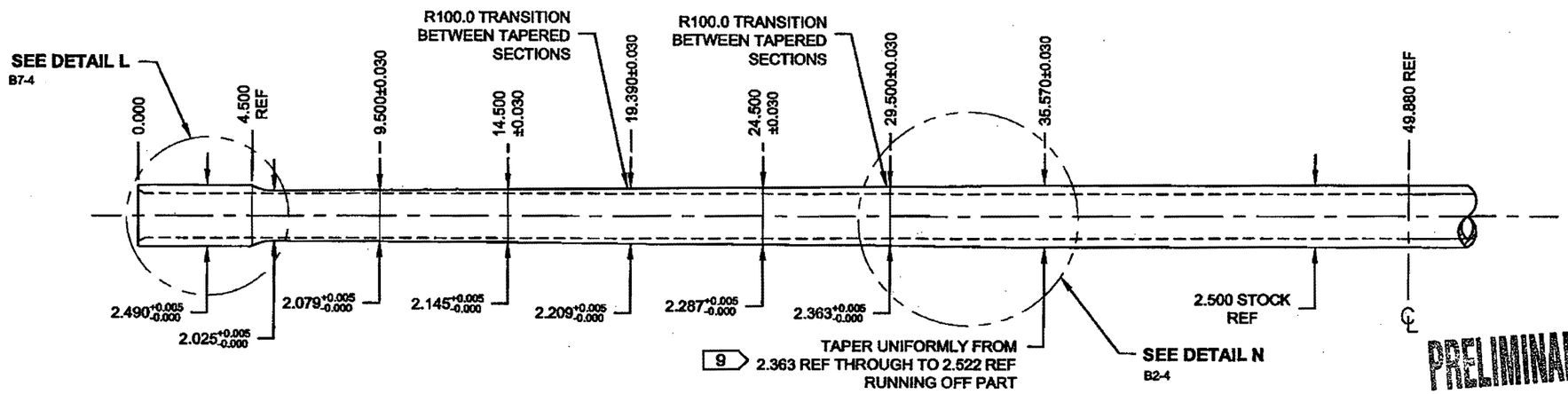

PRELIMINARY ISSUE

Rev PA1 11.01.06

TURNING DETAIL

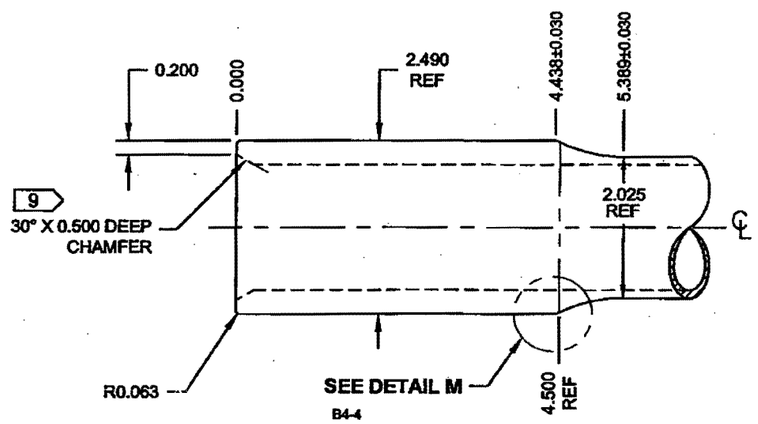

C7-4 **DETAIL L: CROSSTUBE CUFF**
SCALE 2.5X

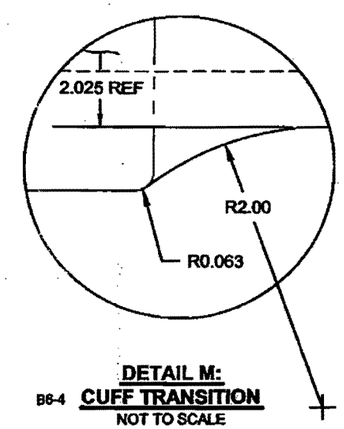

B6-4 **DETAIL M: CUFF TRANSITION**
NOT TO SCALE

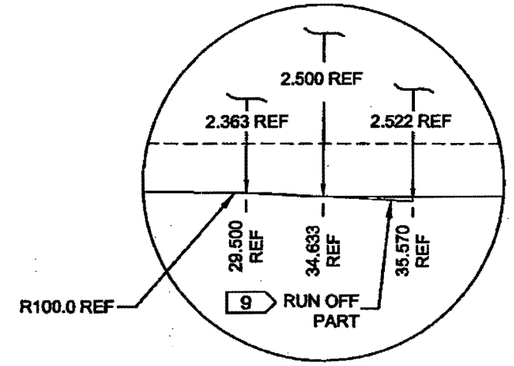

C4-4 **DETAIL N: TAPER RUN-OFF**
NOT TO SCALE

68089

DESIGN		**DART AEROSPACE LTD** HAWKESBURY, ONTARIO, CANADA
DRAWN		
CHECKED		DRAWING NO. D206-667-247 — REV. A — SHEET 4 OF 4
MFG. APPR.		
APPROVED		TITLE: CROSSTUBE ASS'Y (206L MID AFT) — SCALE: NTS
DE APPR.		
DATE 10.12.23		

COPYRIGHT © 2010 BY DART AEROSPACE LTD
THIS DOCUMENT IS PRIVATE AND CONFIDENTIAL AND IS SUPPLIED ON THE EXPRESS CONDITION THAT IT IS NOT TO BE USED FOR ANY PURPOSE OR COPIED OR COMMUNICATED TO ANY OTHER PERSON WITHOUT WRITTEN PERMISSION FROM DART AEROSPACE LTD.

HeathAir
INTERNATIONAL (1991) INC.
681 Ave. Lepine, Dorval, Québec H9P 1G3
Tél.: 514 636-1000 • Fax: 514 636-0031

W.O. 44191

A.M.O. Number: 46/90

NON-DESTRUCTIVE TESTING REPORT

AIRCRAFT/COMPONENT INFORMATION

REGISTRATION: MODEL/TYPE: SERIAL NUMBER:

TOTAL HR/LDG: OPERATED BY: BASED AT:

INSPECTION REQUIREMENTS

Carry out FPI of (4) cross tubes (external surface) as per ASTM E-1417-05 and the Dart QSI 038, Section 4.1.1 (on file at client) - parts delivered to HeathAir.

Qty (2) P/N D212-664-101 S/N's B67866 and B67867.
Qty (1) P/N D206-667-207BL S/N B68089.
Qty (1) P/N D206-667-107BL S/N B68088. Sales Order Ref.: 230626

Contact: Chantal Lavoie at 613-632-5200 for pick-up.

11-04-14

☐ RADIOGRAPHY ☐ ULTRASONIC ☑ PENETRANT ☐ MAGNETIC PARTICLE ☐ EDDY CURRENT

INSPECTION REPORT

Fluorescent penetrant inspection was performed in accordance with the above requirements on (4) cross tubes.

Note: A Level 3 penetrant was substituted for the requested Level 2 (3 is more sensitive) Ardrox 970P25E Batch #04B503.

(4) cross tubes inspected. (4) PASSED / (0) FAILED.

THE MAINTENANCE DESCRIBED ABOVE HAS BEEN PERFORMED IN ACCORDANCE WITH THE APPLICABLE STANDARDS OF AIRWORTHINESS

INSPECTED BY:

DATE April 13, 2011

CUSTOMER INFORMATION

CUSTOMER: Dart Aerospace

P.O. NUMBER

ADDRESS:

CONTACT NAME: Chantal

LABOUR	@	$
MATERIALS	@	
TRAVEL EXPENSES	@	GST
HOTEL EXPENSES	@	PST

INVOICE NO. PO 13857

TOTAL $

WHITE COPY – INSPECTION FILE • YELLOW COPY – CUSTOMER • PINK COPY – ACCOUNTANT

Item	Qty -247	Part Number	Description
1	X	D206-667-247	CROSSTUBE ASSEMBLY (206L MID AFT)
2	1	D6004-115	CROSSTUBE
3	2	D2873-043	NUT PLATE
4	2	D2873-045	NUT PLATE
5	2	D2892-1	SUPPORT
6	4	D3595-063-450	RUBBER CUSHION
7	4	MS21920-22	CLAMP
8	14	MS20601AD4W10	RIVET (OR NAS9302B-4-10)
9	A/R	MAGNOBOND 6398	ROCKWELL SPECIFICATION RBO-120-023 ADHESIVE (TEXTRON/BELL SPEC. 299-947-100, TYPE II, CLASS 2 ADHESIVE)

GENERAL NOTES:

1) MATERIAL: MANUFACTURED FROM D6004-115
   FINISHED LENGTH = 99.76±0.020
2) FINISH: CHEMICAL CONVERSION COAT PER DART QSI 005 4.1
   PRIME INSIDE AND OUTSIDE PER DART QSI 005 4.2
   PAINT OUTSIDE PER DART QSI 005 4.2
3) TOLERANCES ARE PER DART QSI 018 UNLESS OTHERWISE NOTED.
4) UNITS: INCHES UNLESS OTHERWISE NOTED.
5) BREAK SHARP EDGES: 0.005 TO 0.010 MAX.
6) IDENTIFICATION: SCRIBE DART PART NUMBER "D206-667-247" AND BATCH NUMBER ON INSIDE OF CUFF PER DART QSI 044 6.4 (VIBRATING STYLUS).
7) WEIGHT: 21.1 lbs (-607 = 17.7 lbs)
8) PART IS SYMMETRIC ABOUT CENTERLINE.
9) RUN CUTTER OFF PART WHERE INDICATED. BLEND OUT EDGE LONGITUDINALLY, TRANSITION SHOULD BE SMOOTH.
10) BEND PROGRESSIVELY WITH A MINIMUM OF 10 PASSES. MAXIMUM TUBE FLATTENING DUE TO BENDING IS 6% BASED ON O.D.
11) LIQUID PENETRANT INSPECT OUTSIDE SURFACE OF CROSSTUBE PER QSI 038.
12) INSTALL D2892-1 SUPPORT USING 0.03" TO 0.06" THICK LAYER OF MAGNOBOND 6398 PER QSI 015. LET CURE FOR 12 HOURS AFTER INSTALLATION AND PRIOR TO PACKAGING.
13) INSTALL MS21920-22 CLAMPS WITH D3595-063-450 RUBBER CUSHIONS TO SECURE THE D2892-1 SUPPORT ON TOP SIDE OF THE CROSSTUBE. ENSURE CLAMP MECHANISMS ARE LOCATED ON CROSSTUBE SUPPORTS.
14) EXTREME CARE MUST BE TAKEN TO PROTECT THE OUTSIDE SURFACE OF THE TUBE. THE OUTSIDE SURFACE MUST BE SMOOTH AND FREE FROM SURFACE DEFECTS SUCH AS SCRATCHES, NICKS, OR DENTS. DEFECTS UP TO 0.005" MAY BE BLENDED OUT LONGITUDINALLY. CIRCUMFERENTIAL GRIND MARKS ARE UNACCEPTABLE.
15) TORQUE CLAMPS 80 TO 100 IN-LB. ENSURE AT LEAST 1.5 THREADS ARE SHOWING IN SAFETY AND THAT NUT HAS NOT BOTTOMED-OUT AFTER TORQUING.

68089

RELEASED
2011 -05- 24

REV.	DESCRIPTION	BY	DATE
A	NEW ISSUE	CP	10.12.23

DESIGN		DART AEROSPACE LTD HAWKESBURY, ONTARIO, CANADA	
DRAWN			
CHECKED		DRAWING NO.	REV. A
MFG. APPR.		D206-667-247	SHEET 1 OF 4
APPROVED		TITLE	SCALE
DE APPR.		CROSSTUBE ASS'Y (206L MID AFT)	NTS
DATE	10.12.23		

COPYRIGHT © 2010 BY DART AEROSPACE LTD
THIS DOCUMENT IS PRIVATE AND CONFIDENTIAL AND IS SUPPLIED ON THE IMPLIED CONDITION THAT IT IS NOT TO BE USED FOR ANY PURPOSE OR COPIED OR COMMUNICATED TO ANY OTHER PERSON WITHOUT WRITTEN PERMISSION FROM DART AEROSPACE LTD.

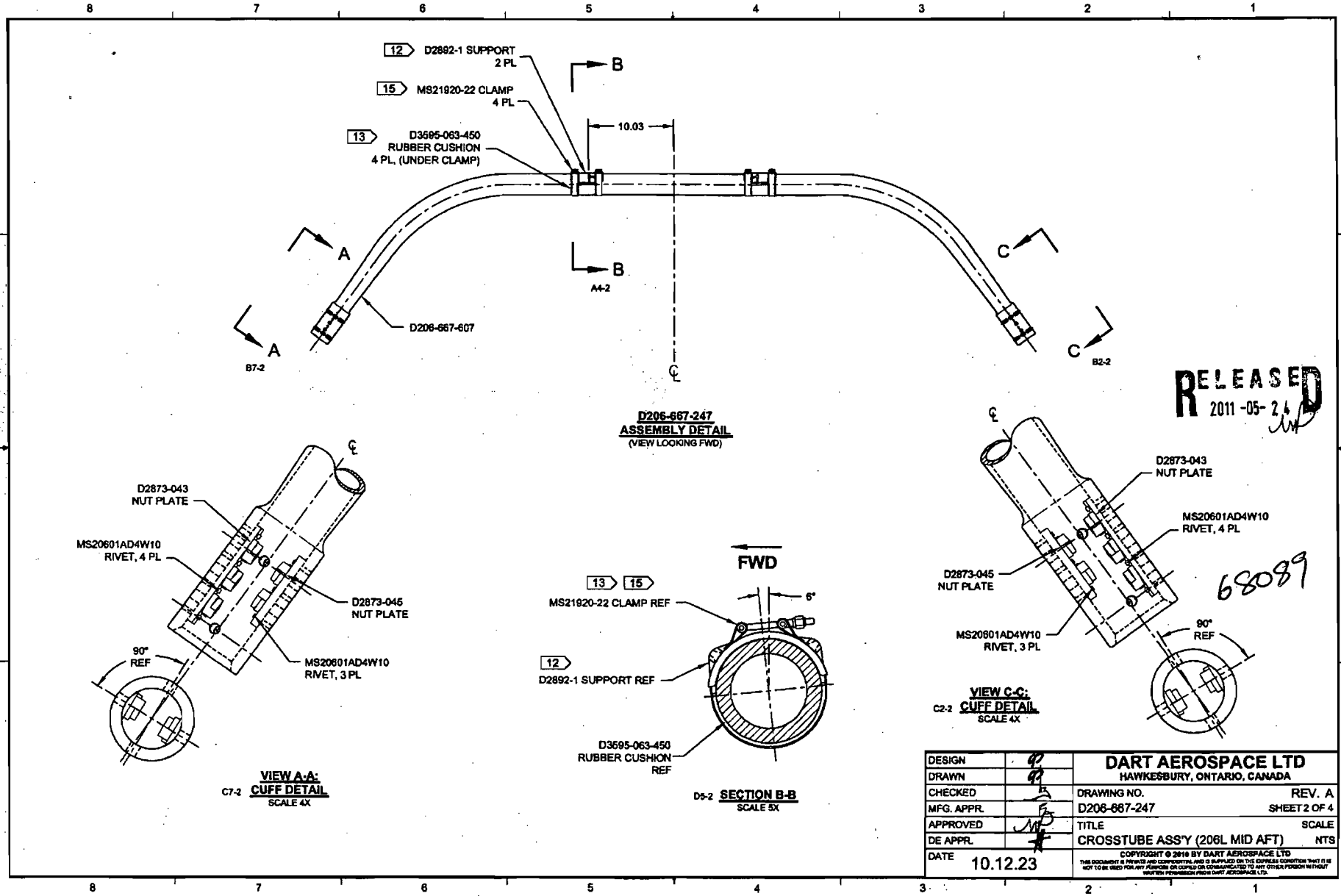
12 D2892-1 SUPPORT 2 PL
15 MS21920-22 CLAMP 4 PL
13 D3595-063-450 RUBBER CUSHION 4 PL, (UNDER CLAMP)
10.03
B
A
A4-2
B7-2
C
B2-2
D206-667-607
D206-667-247
ASSEMBLY DETAIL
(VIEW LOOKING FWD)
RELEASED
2011 -05- 24
D2873-043 NUT PLATE
MS20601AD4W10 RIVET, 4 PL
D2873-045 NUT PLATE
MS20601AD4W10 RIVET, 3 PL
90° REF
VIEW A-A:
C7-2 CUFF DETAIL
SCALE 4X
FWD
13 15
MS21920-22 CLAMP REF
6°
12
D2892-1 SUPPORT REF
D3595-063-450 RUBBER CUSHION REF
D5-2 SECTION B-B
SCALE 5X
68089
VIEW C-C:
C2-2 CUFF DETAIL
SCALE 4X
DESIGN
DRAWN
CHECKED
MFG. APPR.
APPROVED
DE APPR.
DATE 10.12.23
DART AEROSPACE LTD
HAWKESBURY, ONTARIO, CANADA
DRAWING NO. D206-667-247
REV. A
SHEET 2 OF 4
TITLE CROSSTUBE ASS'Y (206L MID AFT)
SCALE NTS
COPYRIGHT © 2010 BY DART AEROSPACE LTD
THIS DOCUMENT IS PRIVATE AND CONFIDENTIAL AND IS SUPPLIED ON THE EXPRESS CONDITION THAT IT IS NOT TO BE USED FOR ANY PURPOSE OR COPIED OR COMMUNICATED TO ANY OTHER PERSON WITHOUT WRITTEN PERMISSION FROM DART AEROSPACE LTD.

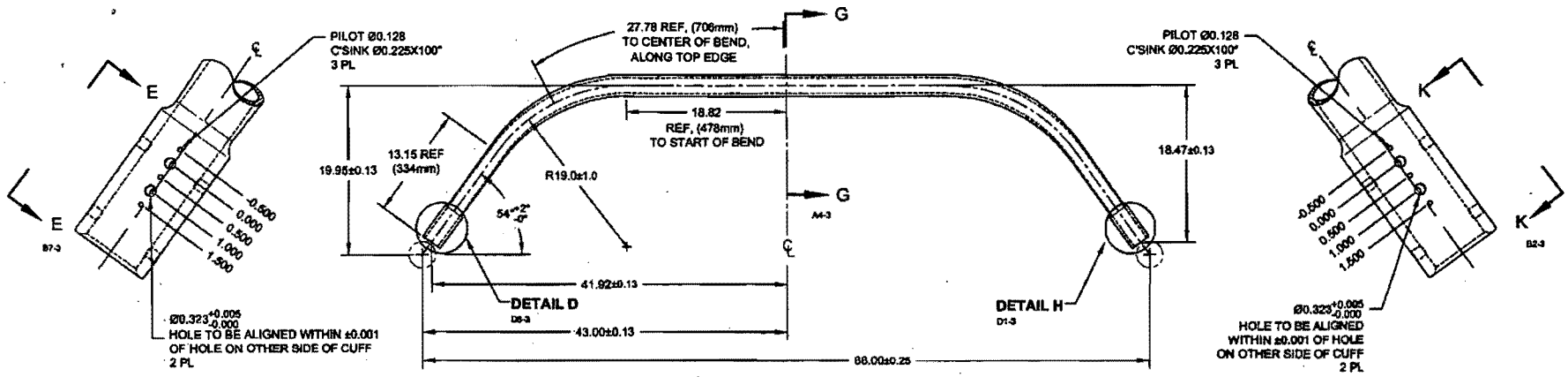

C6-3 **DETAIL D**
SCALE 4X
(VIEW LOOKING FWD)

10 **D206-667-607**
BENDING AND DRILLING DETAIL
(VIEW LOOKING FWD)

C3-3 **DETAIL H**
SCALE 4X
(VIEW LOOKING FWD)

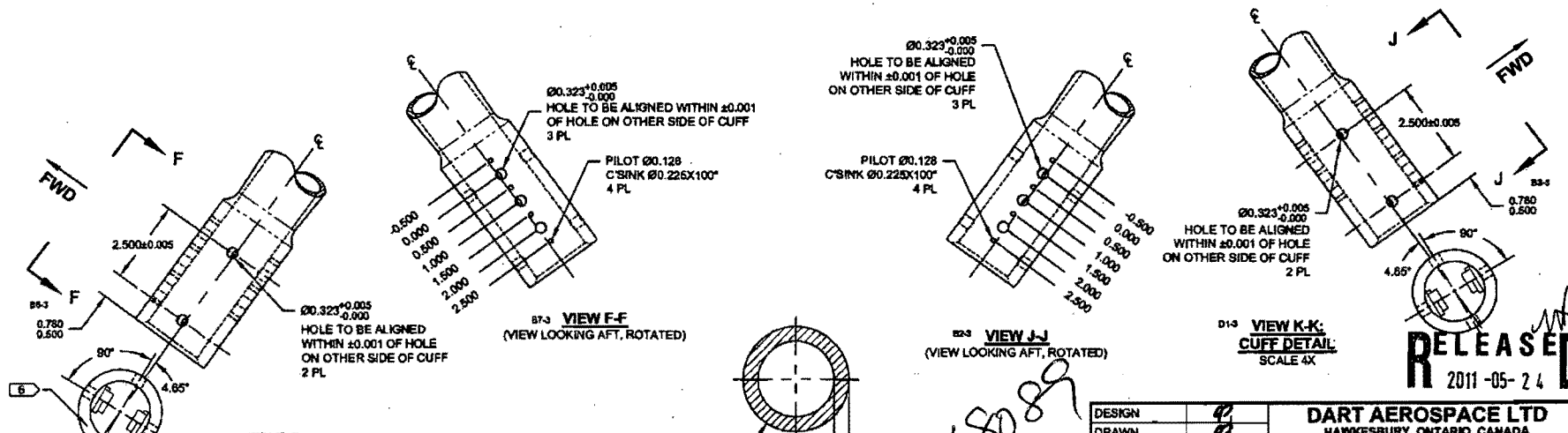

D8-3 **VIEW E-E: CUFF DETAIL**
SCALE 4X

B7-3 **VIEW F-F**
(VIEW LOOKING AFT, ROTATED)

D4-3 **SECTION G-G**
SCALE 5X

B2-3 **VIEW J-J**
(VIEW LOOKING AFT, ROTATED)

D1-3 **VIEW K-K: CUFF DETAIL**
SCALE 4X

RELEASED
2011-05-24

68089

DESIGN		**DART AEROSPACE LTD** HAWKESBURY, ONTARIO, CANADA
DRAWN		
CHECKED		DRAWING NO. D206-667-247 — REV. A — SHEET 3 OF 4
MFG. APPR.		
APPROVED		TITLE: CROSSTUBE ASS'Y (206L MID AFT) — SCALE: NTS
DE APPR.		
DATE	10.12.23	

COPYRIGHT © 2016 BY DART AEROSPACE LTD
THIS DOCUMENT IS PRIVATE AND CONFIDENTIAL AND IS SUPPLIED ON THE EXPRESS CONDITION THAT IT IS NOT TO BE USED FOR ANY PURPOSE OR COPIED OR COMMUNICATED TO ANY OTHER PERSON WITHOUT WRITTEN PERMISSION FROM DART AEROSPACE LTD.

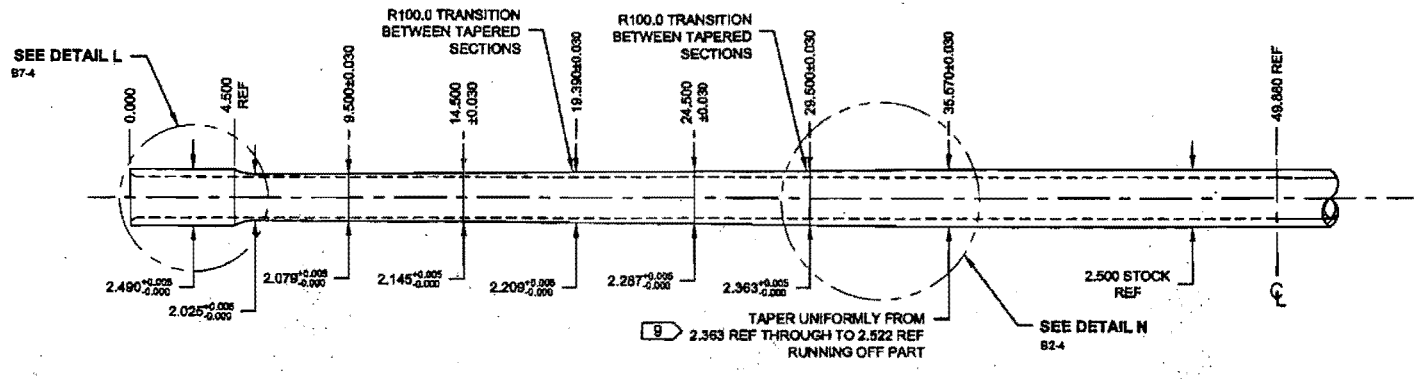

TURNING DETAIL

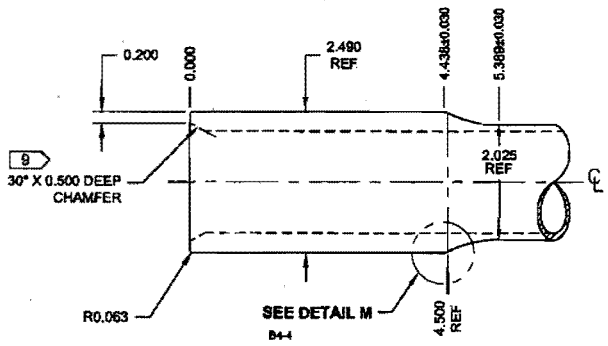

C7-4 **DETAIL L: CROSSTUBE CUFF**
SCALE 2.5X

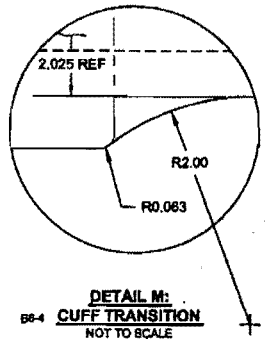

B6-4 **DETAIL M: CUFF TRANSITION**
NOT TO SCALE

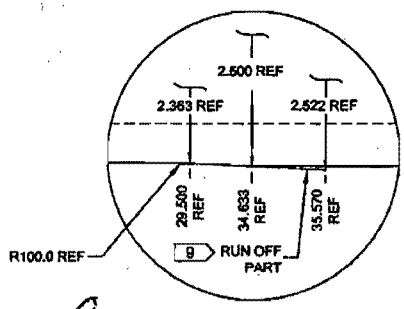

C4-4 **DETAIL N: TAPER RUN-OFF**
NOT TO SCALE

68089

RELEASED
2011-05-26

DESIGN		DART AEROSPACE LTD HAWKESBURY, ONTARIO, CANADA
DRAWN		
CHECKED		DRAWING NO. REV. A
MFG. APPR.		D206-667-247 SHEET 4 OF 4
APPROVED		TITLE SCALE
DE APPR.		CROSSTUBE ASS'Y (206L MID AFT) NTS
DATE	10.12.23	

COPYRIGHT © 2010 BY DART AEROSPACE LTD
THIS DOCUMENT IS PRIVATE AND CONFIDENTIAL AND IS SUPPLIED ON THE EXPRESS CONDITION THAT IT IS NOT TO BE USED FOR ANY PURPOSE OR COPIED OR COMMUNICATED TO ANY OTHER PERSON WITHOUT WRITTEN PERMISSION FROM DART AEROSPACE LTD.

5.2 MID-HEIGHT CROSSTUBES

Item	Qty -107	Qty -207	Part Number	Description
	X		**D206-667-107**	**CROSSTUBE INSTALLATION, 206L/L-1/L-3/L-4 MID FWD**
		X	**D206-667-207**	**CROSSTUBE INSTALLATION, 206L/L-1/L-3/L-4 MID AFT**
7	1		D206-667-147	CROSSTUBE ASSEMBLY, 206L/L-1/L-3/L-4 MID FWD
8		1	D206-667-247	CROSSTUBE ASSEMBLY, 206L/L-1/L-3/L-4 MID AFT
10	*2		D2891-1	SUPPORT
11		*2	D2892-1	SUPPORT
13	*4		D3595-063-395	RUBBER CUSHION
14		*4	D3595-063-450	RUBBER CUSHION
16	*4		MS21920-20	CLAMP
17		*4	MS21920-22	CLAMP
19	4		AN5-32A	BOLT
20		4	AN5-34A	BOLT
21	4	4	MS21042L5	NUT (OR MS21042-5)
22	8	8	NAS1149C0563J	WASHER (OR AN950JD516)
40	*2	*2	D2873-043	NUT PLATE
41	*2	*2	D2873-045	NUT PLATE
44	10		AN5-7A	BOLT
45		10	AN5-10A	BOLT
46	4		AN5-30A	BOLT
47		4	AN5-32A	BOLT
48	12		AN970-4	WASHER (OPTIONAL)
50	10	10	NAS1149C0563J	WASHER (OR AN960JD516)

*REFERENCE ONLY. PARTS ARE INCLUDED IN D206-667-147/-247 ASSEMBLIES ABOVE

• COPYRIGHT © 2001 BY DART AEROSPACE LTD •
THIS DOCUMENT IS PRIVATE AND CONFIDENTIAL AND IS SUPPLIED ON THE EXPRESS CONDITION THAT IT IS NOT TO BE USED FOR ANY PURPOSE OR COPIED OR COMMUNICATED TO ANY OTHER PERSON WITHOUT WRITTEN PERMISSION FROM DART AEROSPACE LTD.